Ewart

AGRI SERVICES LTD

EWART: making chain in the UK since 1880

DİNAMİK
TRANSMİSYON ZİNCİR TİC.SAN.A.Ş.

General Engineering Chains

Drive Chains / Steel Bushed / Combination

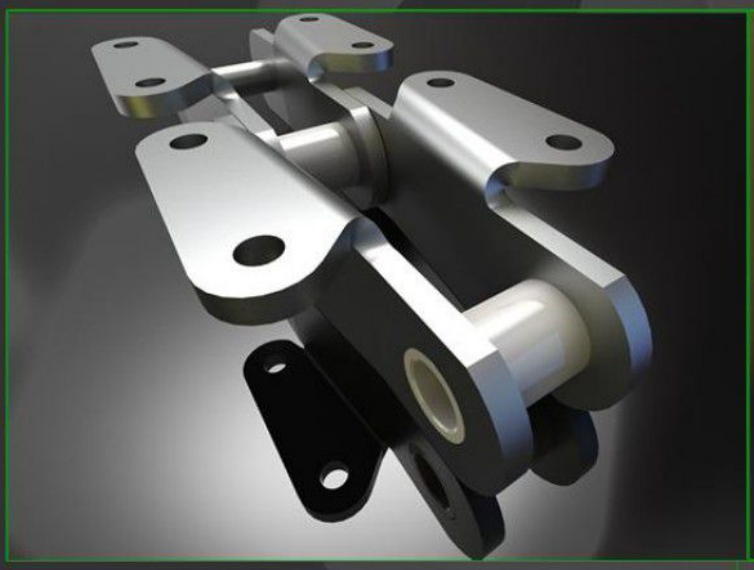

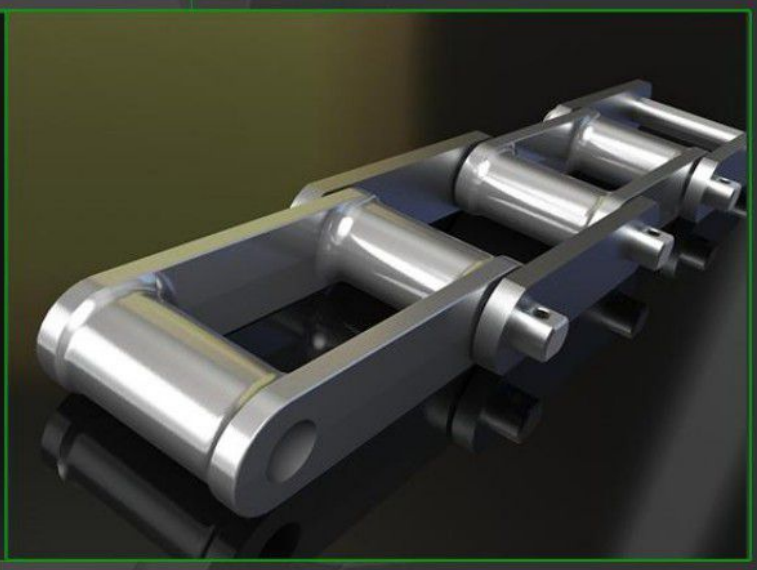

EWART

THE BEST KNOWN CHAIN BRAND IN THE WORLD

Dinamik Transmisyon Zincir Tic. ve San. A.Ş. / Kürekçiler Sok. No: 24 Karaköy / Istanbul
Tel. +90 212 245 04 98 / Fax +90 212 243 54 34 / info@dinamikzincir.com
www.dinamikzincir.com

PLAIN CHAIN

CRANKED SIDED

DRAWING NO. 116

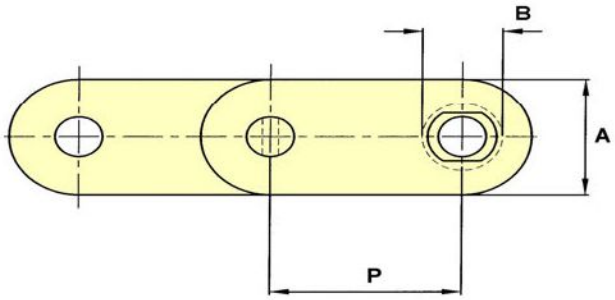

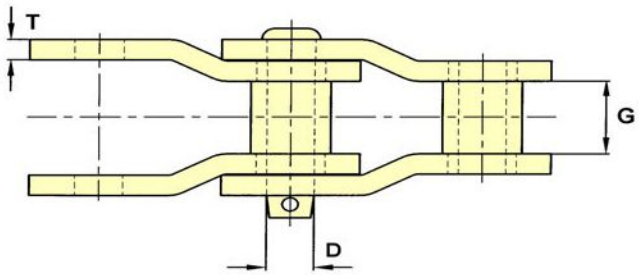

CHAIN NO.	PITCH P	ALLOW. LOAD	U.T.S.	PIN DIA. D	SIDEBAR DEPTH A	MAX. GEARING G	BUSH DIA. B	SIDEBAR THICKNESS T
ER4103	3.075	4,920	44,000	0.75	1.75	1.25	1.25	0.31
SS100C	3.910	4,150	27,500	0.56	1.75	1.51	1.25	0.31
B5094	4.000	5,100	40,000	0.62	1.75	1.58	1.44	0.31
B5117	4.000	7,800	74,000	0.75	1.56	2.00	1.38	0.38

STRAIGHT SIDED

DRAWING NO. 103

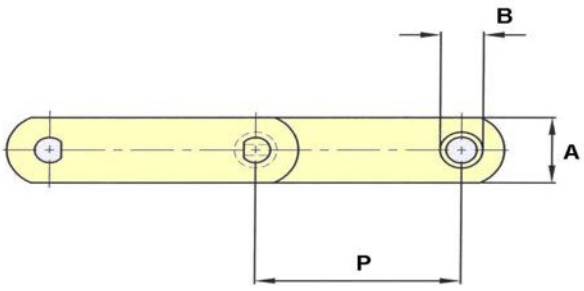

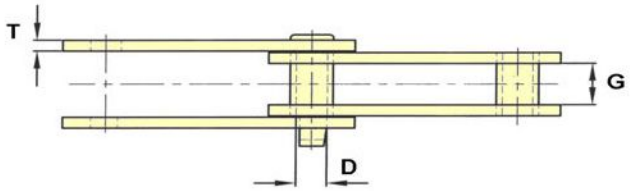

CHAIN NO.	PITCH P	ALLOW. LOAD	U.T.S.	PIN DIA. D	SIDEBAR DEPTH A	MAX. GEARING G	BUSH DIA. B	SIDEBAR THICKNESS T
SS104	4.050	6,200	25,000	0.62	1.50	2.25	1.19	0.31

A1 ATTACHMENTS

DRAWING NO. 119

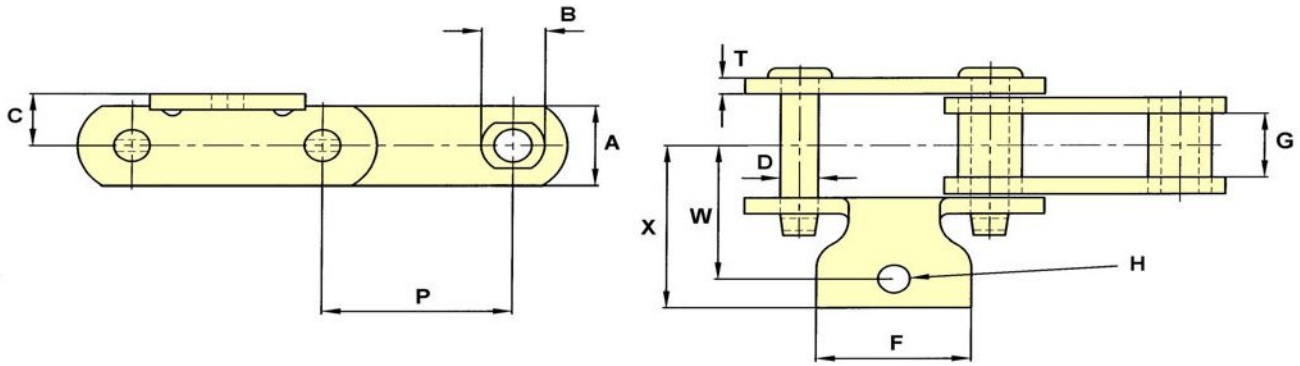

CHAIN NO.	PITCH P	ALLOW. LOAD	U.T.S.	PIN DIA. D	SIDEBAR DEPTH A	MAX GEARING G	BARREL DIA. B	C	F	H	T	W	X
SS188	2.609	2,800	25,000	0.50	1.25	1.06	0.87	0.81	2.13	0.38	0.25	1.87	1.56

H = BOLT DIAMETER

AS2 ATTACHMENTS

DRAWING NO. 60

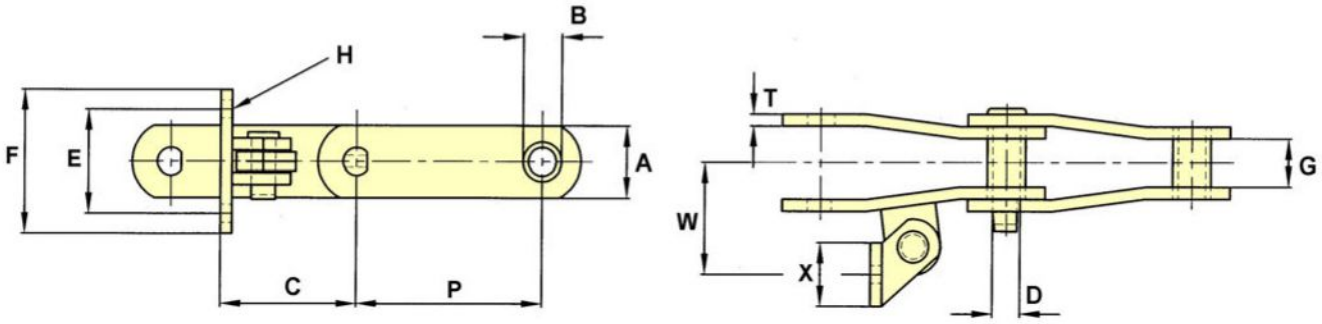

CHAIN NO.	PITCH P	ALLOW. LOAD	U.T.S.	PIN DIA. D	SIDEBAR DEPTH A	MAX. GEARING G	BUSH DIA. B	C	E	F	H	T	W	X
B5111	4.760	8,860	75,000	0.75	2.00	2.62	1.44	4.76	3.50	5.00	0.50	0.38	4.00	2.00

H = BOLT DIAMETER

AS20 ATTACHMENTS

DRAWING NO. 127 H = BOLT DIAMETER

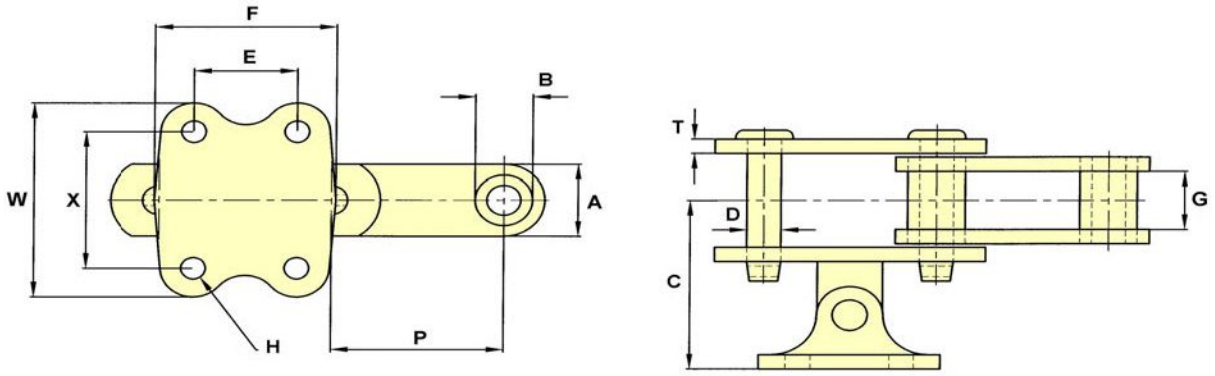

CHAIN NO.	PITCH P	ALLOW. LOAD	U.T.S.	PIN DIA. D	SIDEBAR DEPTH A	MAX GEARING G	BARREL DIA. B	C	E	F	H	T	W	X
SS188	2.609	2,800	25,000	0.50	1.25	1.06	0.88	2.94	1.56	2.75	0.31	0.25	3.19	2.19
SS102B	4.000	6,300	40,000	0.62	1.50	2.13	1.00	3.89	1.69	3.13	0.31	0.38	3.50	2.44
SS110	6.000	6,300	40,000	0.62	1.50	2.13	1.25	4.25	2.50	4.00	0.38	0.38	3.50	2.25
B5239	6.000	8,860	75,000	0.75	2.00	2.62	1.44	4.69	2.50	3.75	0.50	0.38	4.25	3.00

DRAWING NO. 155

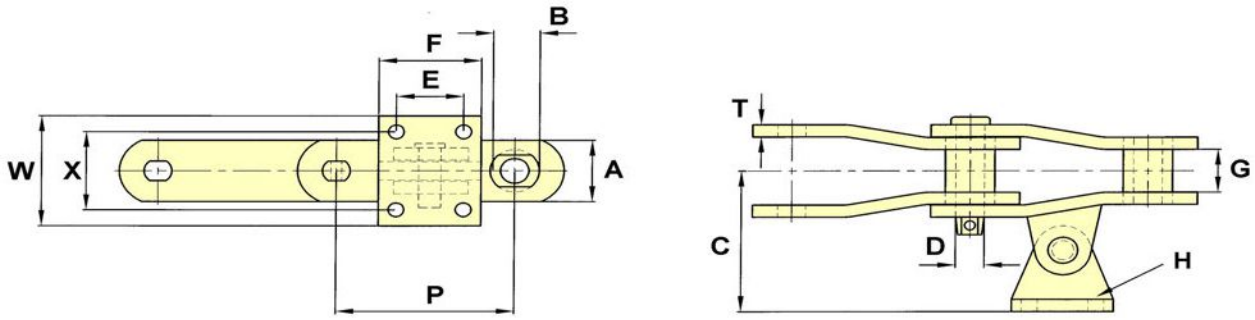

CHAIN NO.	PITCH P	ALLOW. LOAD	U.T.S.	PIN DIA. D	SIDEBAR DEPTH A	MAX GEARING G	BARREL DIA. B	C	E	F	H	T	W	X
B5314	6.300	9,625	100,000	1.00	2.50	1.75	1.75	5.75	2.38	3.62	0.50	0.50	4.50	3.19

F29 ATTACHMENTS

DRAWING NO. 47

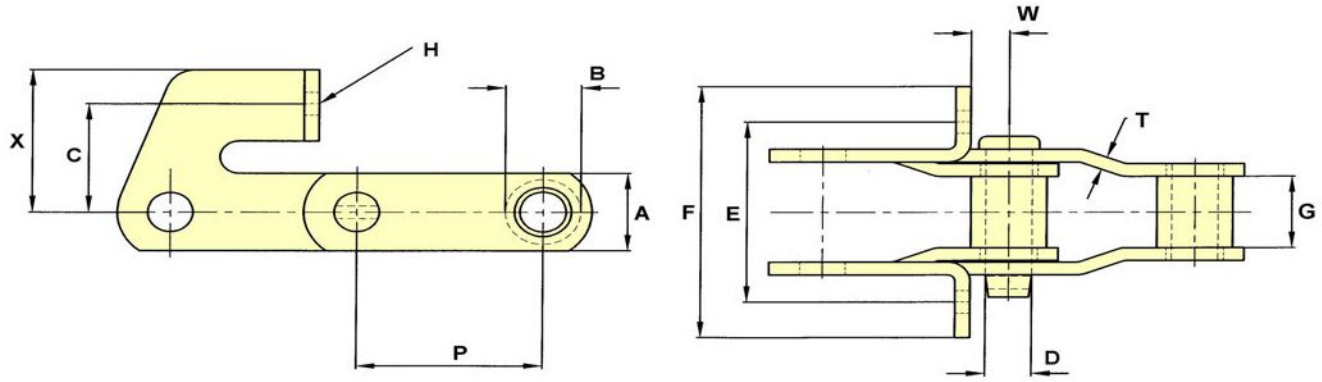

CHAIN NO.	PITCH P	ALLOW. LOAD	U.T.S.	PIN DIA. D	SIDEBAR DEPTH A	MAX. GEARING G	BUSH DIA. B	C	E	F	H	T	W	X
E2103	3.075	4,900	34,000	0.75	1.50	1.38	1.25	2.09	3.50	4.88	0.38	0.25	0.63	2.75

H = BOLT DIAMETER

K1 ATTACHMENTS

DRAWING NO. 36

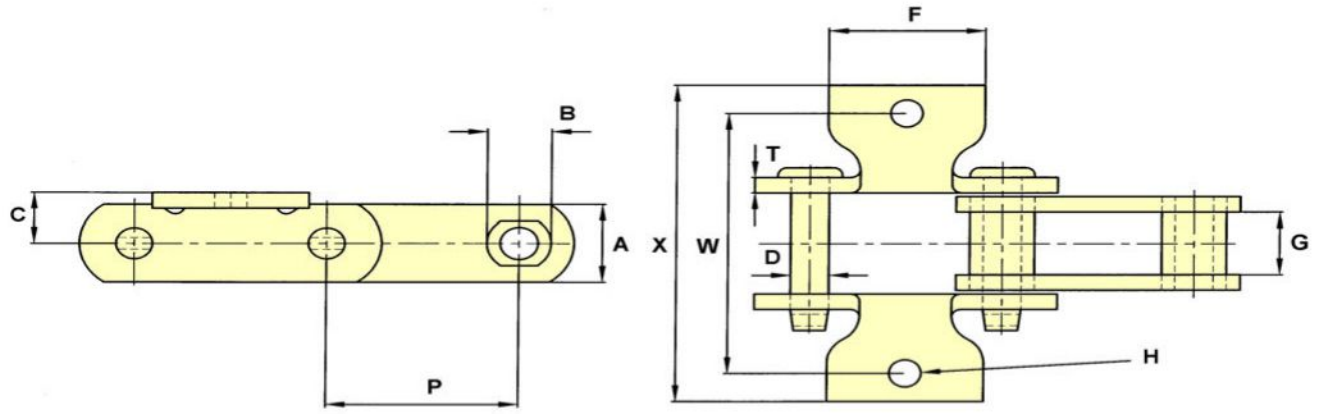

CHAIN NO.	PITCH P	ALLOW. LOAD	U.T.S.	PIN DIA. D	SIDEBAR DEPTH A	MAX GEARING G	BARREL DIA. B	C	F	H	T	W	X
SS188	2.609	2,800	25,000	0.50	1.25	1.06	0.87	0.81	2.13	0.38	0.25	3.75	2.61

H = BOLT DIAMETER

K1 ATTACHMENTS

DRAWING NO. 152

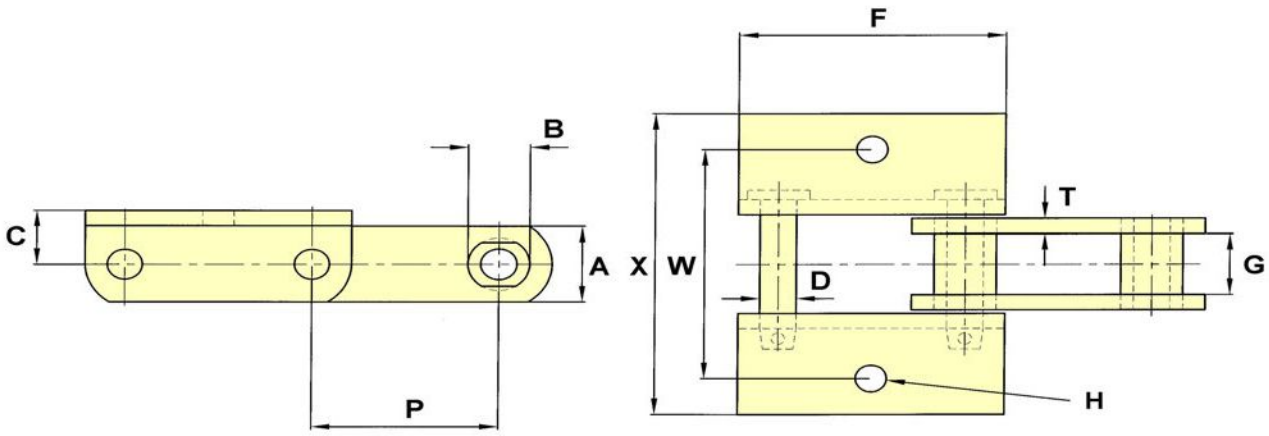

CHAIN NO.	PITCH P	ALLOW. LOAD	U.T.S.	PIN DIA. D	SIDEBAR DEPTH A	MAX GEARING G	BARREL DIA. B	C	F	H	T	W	X
SS578Y	2.630	2,780	27,500	0.50	1.25	1.06	0.87	0.87	3.75	0.38	0.25	3.81	5.00

H = BOLT DIAMETER

DRAWING NO. 151

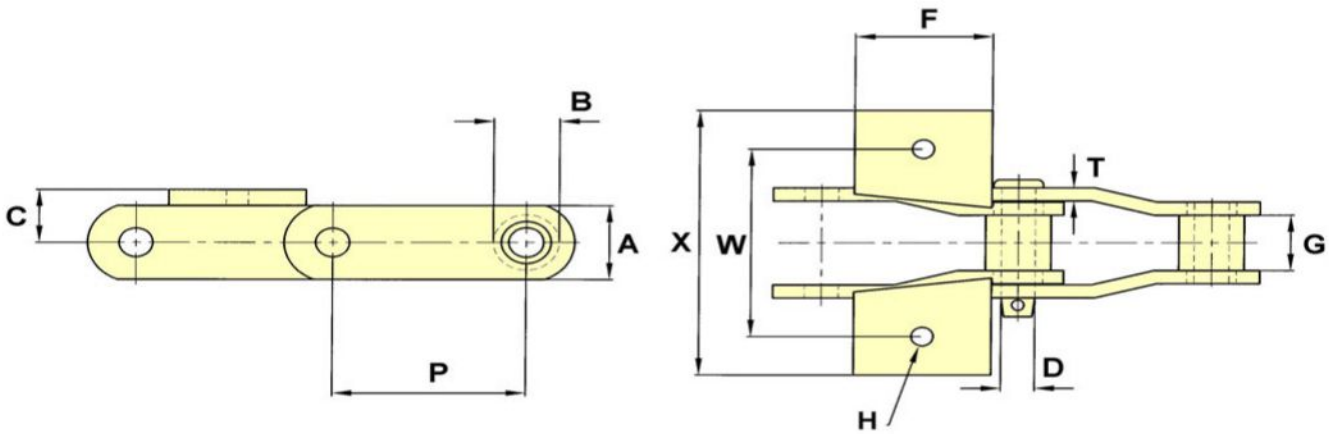

CHAIN NO.	PITCH P	ALLOW. LOAD	U.T.S.	PIN DIA. D	SIDEBAR DEPTH A	MAX GEARING G	BARREL DIA. B	C	F	H	T	W	X
SS100B	3.937	4,100	35,000	0.56	1.75	1.44	1.18	1.00	2.13	0.38	0.31	4.00	5.56

H = BOLT DIAMETER

STEEL BUSHED CHAINS

K2 ATTACHMENTS

STRAIGHT SIDED (DRAWING NO. 38) H = BOLT DIAMETER

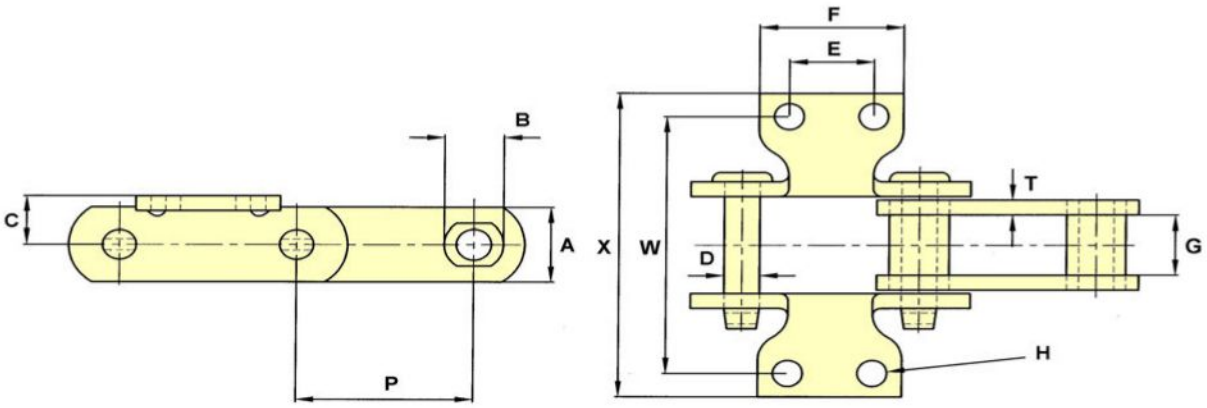

CHAIN NO.	PITCH P	ALLOW. LOAD	U.T.S.	PIN DIA. D	SIDEBAR DEPTH A	MAX GEARING G	BARREL DIA. B	C	E	F	H	T	W	X
SS188	2.609	2,800	25,000	0.50	1.25	1.06	0.88	0.81	1.25	2.13	0.38	0.25	4.19	5.13
SS131	3.075	4,500	40,000	0.62	1.50	1.31	1.25	1.00	1.50	2.63	0.50	0.38	4.13	5.13
SS102B	4.000	6,300	40,000	0.62	1.50	2.13	1.00	1.00	1.75	2.69	0.38	0.38	5.31	6.66
SS111	4.760	8,850	75,000	0.75	2.00	2.63	1.44	1.50	2.31	3.63	0.38	0.38	6.25	8.06
SS110	6.000	6,300	40,000	0.62	1.50	2.13	1.25	1.00	1.75	2.88	0.38	0.38	5.31	6.66
B5239	6.000	8,860	75,000	0.75	2.00	2.62	1.44	1.50	2.31	4.50	0.50	0.38	6.25	8.38

SS102B CAN BE SUPPLIED WITH 1.1/2" DIA. ROLLERS IF REQUIRED

CRANKED SIDED (DRAWING NO. 121) H = BOLT DIAMETER

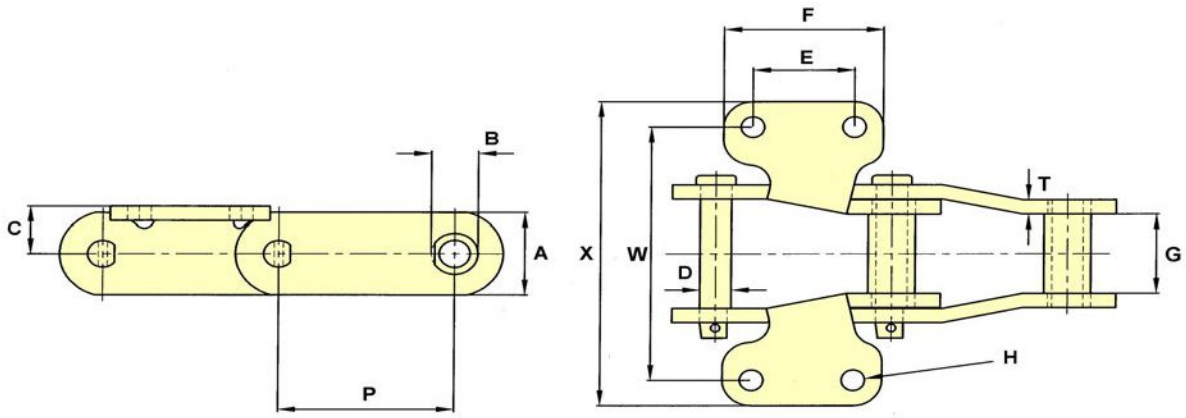

CHAIN NO.	PITCH P	ALLOW. LOAD	U.T.S.	PIN DIA. D	SIDEBAR DEPTH A	MAX GEARING G	BARREL DIA. B	C	E	F	H	T	W	X
7140X	6.060	15,800	70,000	1.06	3.25	3.13	1.63	1.88	3.50	5.50	0.62	0.56	10.00	12.00

K2 ATTACHMENTS

DRAWING NO. 113 H = BOLT DIAMETER

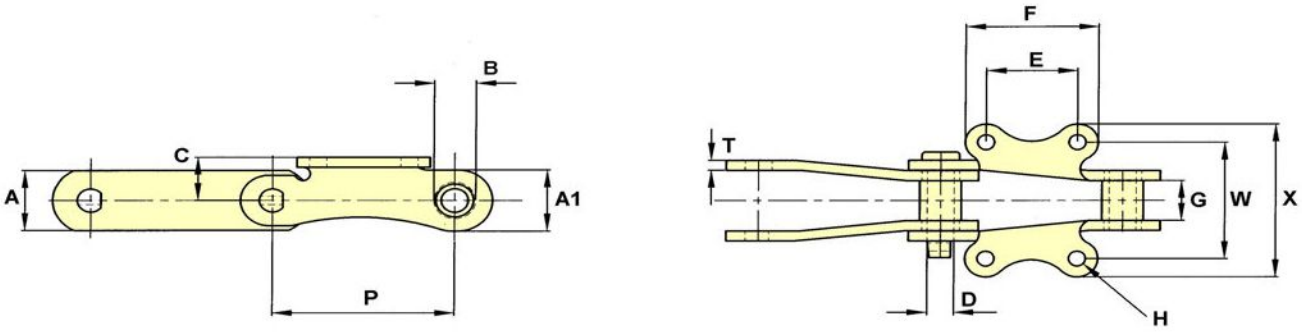

CHAIN NO.	PITCH P	ALLOW. LOAD	U.T.S.	PIN DIA. D	PLAIN SIDEBAR DEPTH A	ATTACH. SIDEBAR DEPTH A1	MAX. GEARING G	BUSH DIA. B	C	E	F	H	T	W	X
B5252	6.000	7,500	100,000	0.87	2.25	2.30	1.50	1.38	1.63	3.00	4.38	0.50	0.38	4.38	5.75

DRAWING NO. 11 H = BOLT DIAMETER

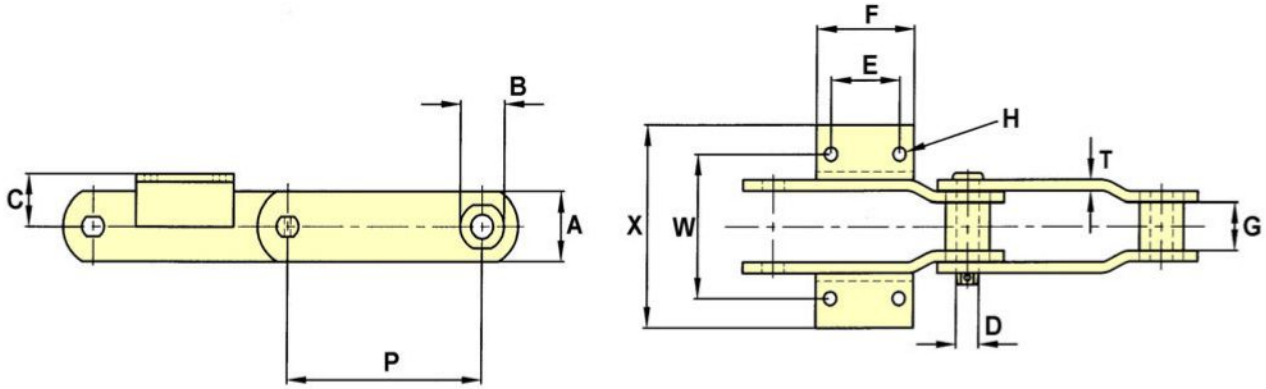

CHAIN NO.	PITCH P	ALLOW. LOAD	U.T.S.	PIN DIA. D	SIDEBAR DEPTH A	MAX. GEARING G	BUSH DIA. B	C	E	F	H	T	W	X
C69A	12.000	21,000	300,000	1.38	4.00	2.75	2.75	3.00	4.21	6.00	18MM	0.63	8.25	11.22
C84	9.000	17,500	250,000	1.25	3.25	2.87	2.50	3.00	3.00	4.50	16MM	0.56	8.25	11.09

K2 ATTACHMENTS

DRAWING NO. 153 H = BOLT DIAMETER

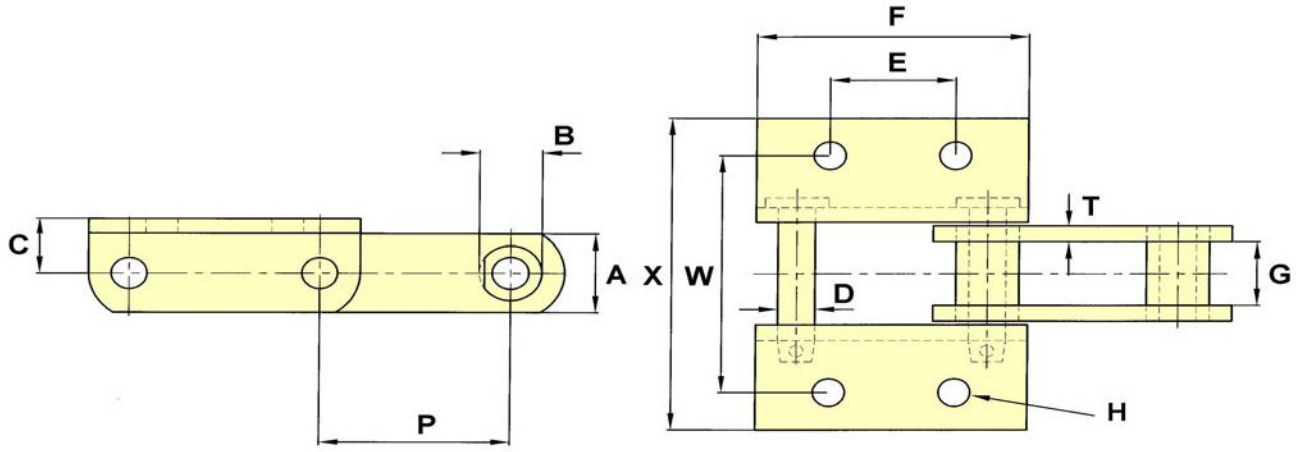

CHAIN NO.	PITCH P	ALLOW. LOAD	U.T.S.	PIN DIA. D	SIDEBAR DEPTH A	MAX. GEARING G	BUSH DIA. B	C	E	F	H	T	W	X
B5288	6.054	17,000	75,000	1.00	3.25	3.50	1.75	1.88	3.50	9.05	0.75	0.56	10.00	12.60

DRAWING NO. 150 H = BOLT DIAMETER

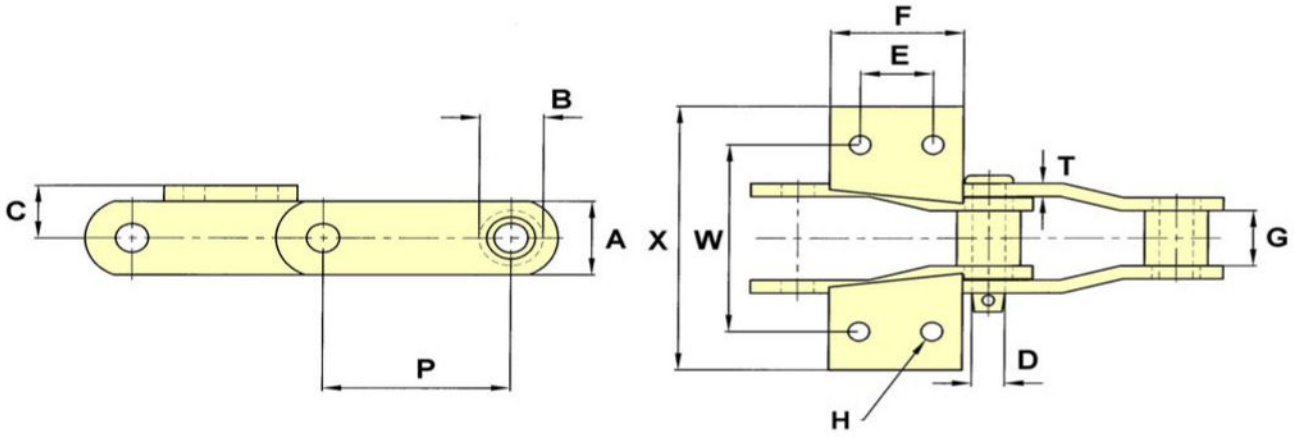

CHAIN NO.	PITCH P	ALLOW. LOAD	U.T.S.	PIN DIA. D	SIDEBAR DEPTH A	MAX. GEARING G	BUSH DIA. B	C	E	F	H	T	W	X
SS100B	3.937	4,100	35,000	0.56	1.75	1.44	1.18	1.00	1.00	2.13	0.38	0.31	4.00	5.56
SS100D	3.937	4,600	45,000	0.69	1.75	1.31	1.31	1.25	1.50	2.75	0.38	0.31	4.44	6.26

K2 ATTACHMENTS

DRAWING NO. 154 H = BOLT DIAMETER

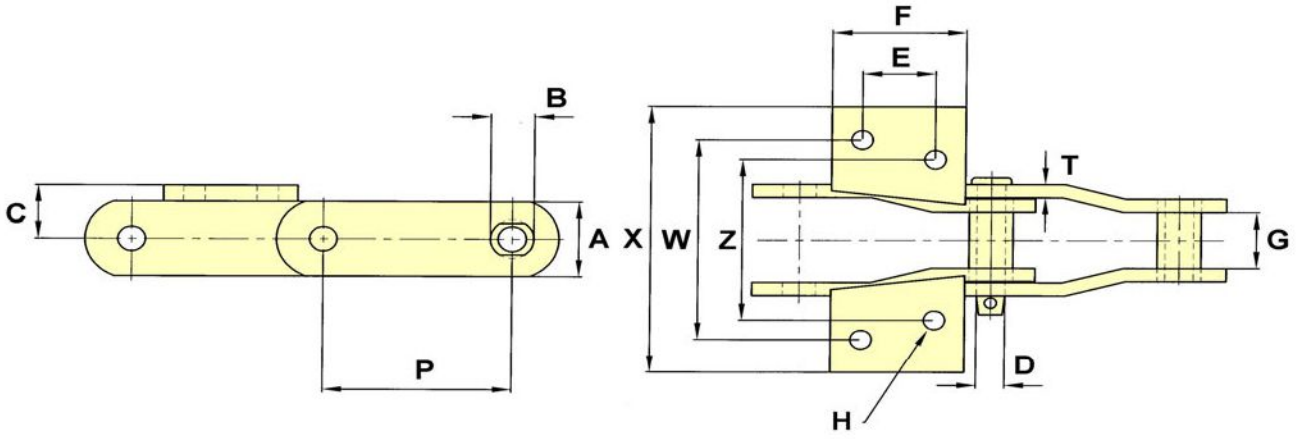

CHAIN NO.	PITCH P	ALLOW. LOAD	U.T.S.	PIN DIA. D	SIDEBAR DEPTH A	MAX. GEARING G	BUSH DIA. B	C	E	F	H	T	W	X	Z
B5274	6.040	9,000	45,000	0.87	2.00	1.94	1.38	1.50	2.75	4.50	0.56	0.50	6.13	7.38	4.87

DRAWING NO. 158 H = BOLT DIAMETER

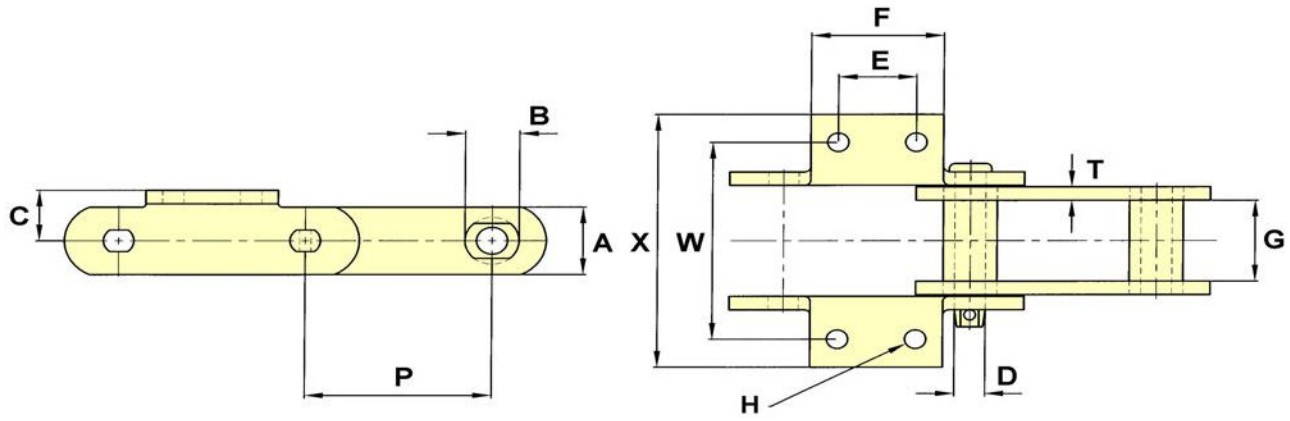

CHAIN NO.	PITCH P	ALLOW. LOAD	U.T.S.	PIN DIA. D	SIDEBAR DEPTH A	MAX. GEARING G	BUSH DIA. B	C	E	F	H	T	W	X
S856	6.000	14,000	100,000	1.00	2.50	3.00	1.75	1.87	2.50	4.25	0.62	0.50	7.25	9.50
S956 K24	6.000	14,000	97,000	1.00	3.00	2.95	1.75	1.87	2.50	6.91	0.69	0.50	7.25	9.50

K24 ATTACHMENTS

DRAWING NO. 149 H = BOLT DIAMETER

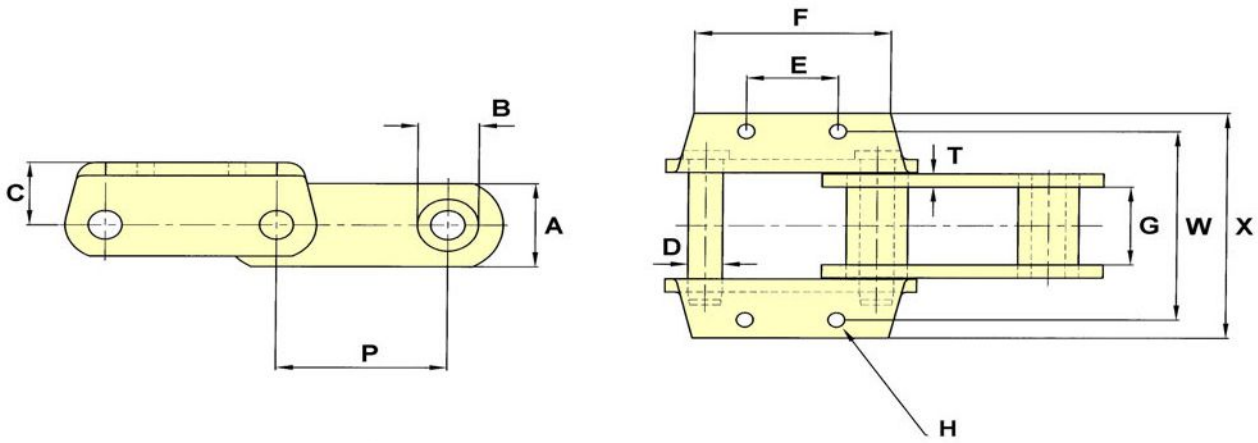

CHAIN NO.	PITCH P	ALLOW. LOAD	U.T.S.	PIN DIA. D	SIDEBAR DEPTH A	MAX. GEARING G	BUSH DIA. B	C	E	F	H	T	W	X
S857	6.000	14,000	100,000	1.00	3.25	3.00	1.75	2.50	2.75	6.87	0.62	0.50	7.75	9.25

ATTACHMENTS CANNOT BE FITTED CONTINUOUSLY

DRAWING NO. 159 H = BOLT DIAMETER

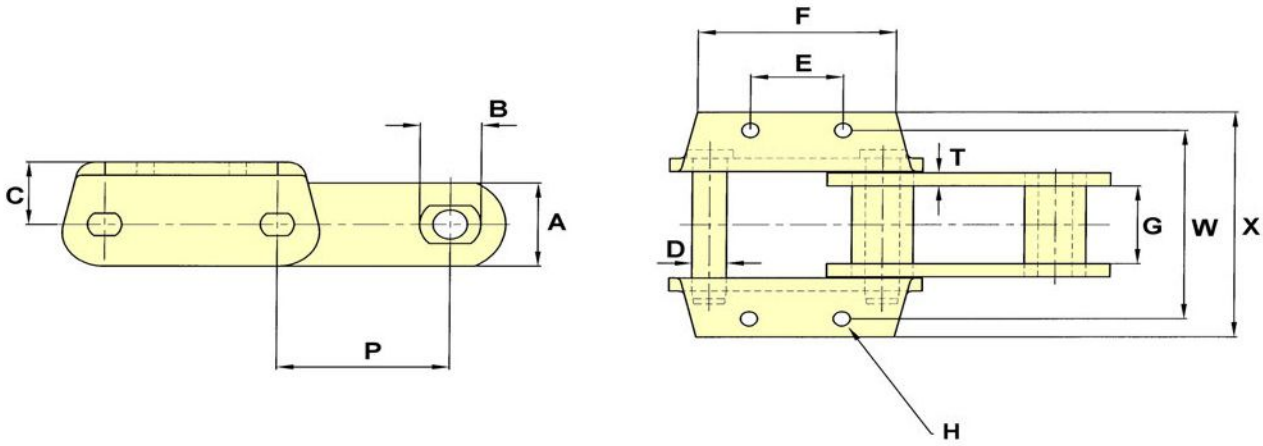

CHAIN NO.	PITCH P	ALLOW. LOAD	U.T.S.	PIN DIA. D	SIDEBAR DEPTH A	MAX. GEARING G	BUSH DIA. B	C	E	F	H	T	W	X
S856	6.000	14,000	100,000	1.00	2.50	3.00	1.75	1.87	2.50	6.87	0.50	0.50	7.25	9.50

ATTACHMENTS CANNOT BE FITTED CONTINUOUSLY

K24 ATTACHMENTS

(DRAWING NO. 156) H = BOLT DIAMETER

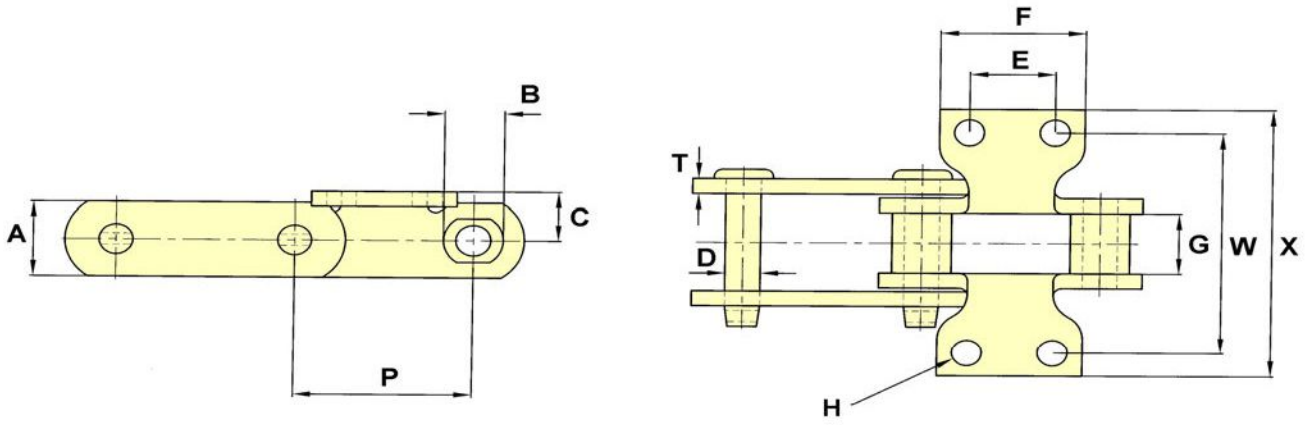

CHAIN NO.	PITCH P	ALLOW. LOAD	U.T.S.	PIN DIA. D	SIDEBAR DEPTH A	MAX GEARING G	BARREL DIA. B	C	E	F	H	T	W	X
SS188	2.609	2,800	25,000	0.50	1.25	1.06	0.88	0.81	1.25	2.13	0.38	0.25	3.75	4.53

DRAWING NO. 153 H = BOLT DIAMETER

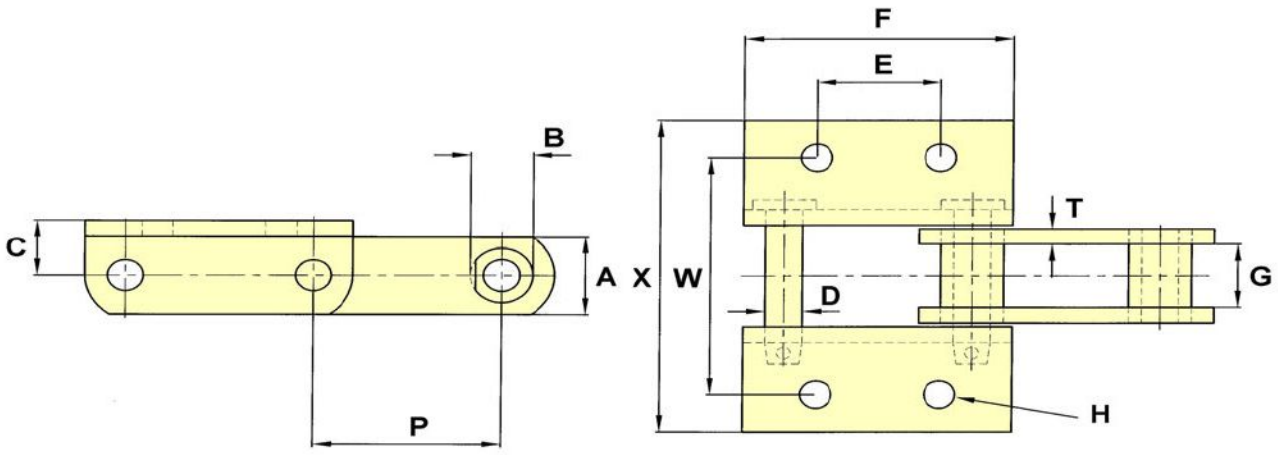

CHAIN NO.	PITCH P	ALLOW. LOAD	U.T.S.	PIN DIA. D	SIDEBAR DEPTH A	MAX GEARING G	BARREL DIA. B	C	E	F	H	T	W	X
SS102B	4.000	6,300	40,000	0.62	1.50	2.13	1.00	1.00	1.75	5.75	0.38	0.38	5.31	6.66

K44 ATTACHMENTS

DRAWING NO. 146 H = BOLT DIAMETER

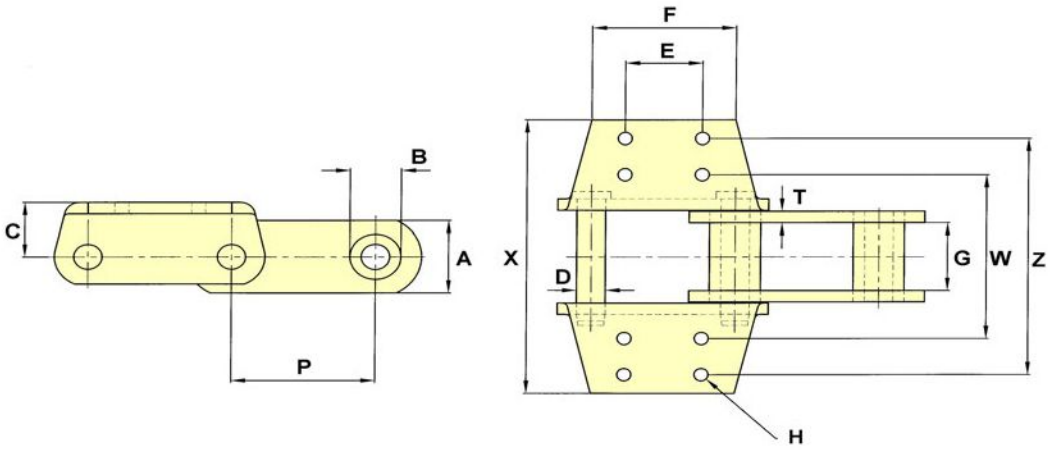

CHAIN NO.	PITCH P	ALLOW. LOAD	U.T.S.	PIN DIA. D	SIDEBAR DEPTH A	MAX GEARING G	BARREL DIA. B	C	E	F	H	T	W	X	Z
S857	6.000	14,000	100,000	1.00	3.25	3.00	1.75	2.50	3.50	5.94	0.50	0.50	7.00	14.00	12.00
S859	6.000	22,000	155,000	1.25	4.00	3.75	2.38	3.00	4.50	6.75	0.63	0.63	9.00	15.00	13.00
S958	6.000	16,300	97,000	1.13	3.25	3.00	2.00	2.50	3.50	5.75	0.56	0.50	7.00	13.68	12.00

K443 ATTACHMENTS

DRAWING NO. 145 H = BOLT DIAMETER

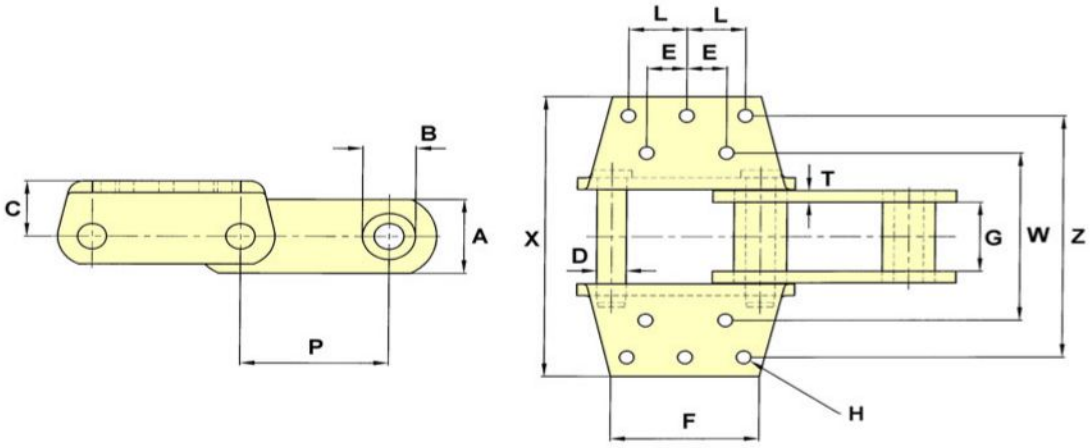

CHAIN NO.	PITCH P	ALLOW. LOAD	U.T.S.	PIN DIA. D	SIDEBAR DEPTH A	MAX GEARING G	BARREL DIA. B	C	E	F	H	L	T	W	X	Z
S864	7.000	22,000	155,000	1.25	4.00	3.75	2.38	3.00	1.87	7.00	0.62	2.75	0.62	9.00	15.00	13.00
S984	7.000	24,000	325,000	1.38	4.00	3.75	2.50	3.00	1.87	7.00	0.62	2.75	0.62	9.00	15.00	13.00

ATTACHMENTS CANNOT BE FITTED CONTINUOUSLY

S1 ATTACHMENTS

DRAWING NO. 51

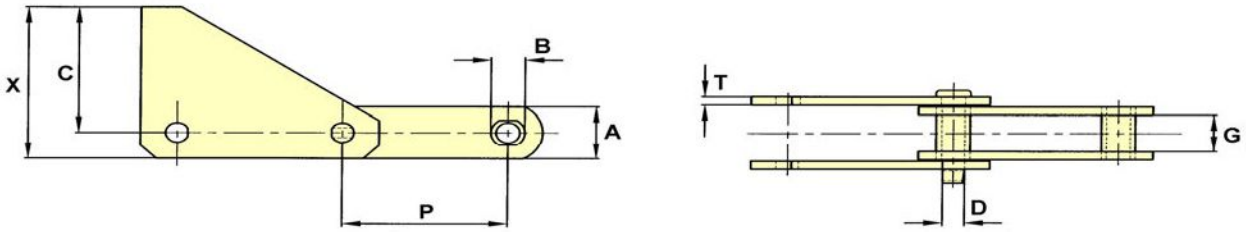

CHAIN NO.	PITCH P	ALLOW. LOAD	U.T.S.	PIN DIA. D	SIDEBAR DEPTH A	MAX. GEARING G	BUSH DIA. B	C	T	X
S82	3.075	4,300	35,000	0.62	1.50	1.37	1.19	5.19	0.25	5.94
SS102B	4.000	6,300	40,000	0.62	1.50	2.13	1.00	3.75	0.38	4.50
SS110	6.000	6,300	40,000	0.62	1.50	2.13	1.25	4.25	0.38	5.50
B5298	6.000	6,550	90,000	0.75	2.38	1.55	1.38	5.00	0.38	6.19
B5143	135mm	5,575	55,000	0.75	2.00	1.50	1.10	4.88	0.31	5.88

PUSHER ATTACHMENTS

DRAWING NO. 13

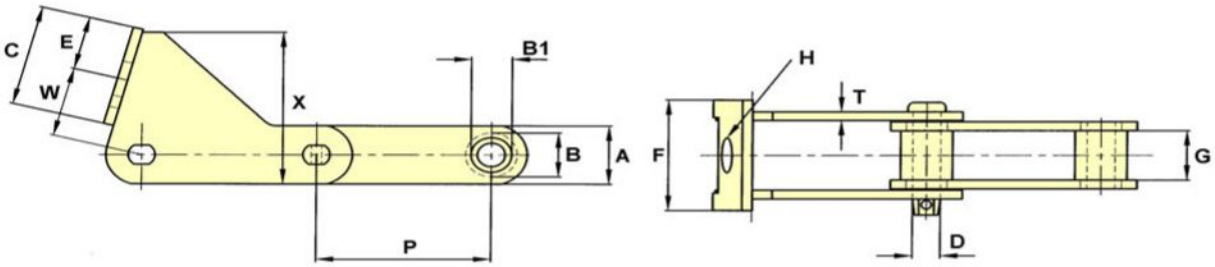

CHAIN NO.	PITCH P	ALLOW. LOAD	U.T.S.	PIN DIA. D	SIDEBAR DEPTH A	MAX. GEARING G	BUSH DIA. B	BUSH SHOULDER B1	C	E	F	H	T	W	X
E160	160mm	10,300	100,000	1.00	2.25	2.20	48mm	1.50	4.25	2.25	4.75	1.50	0.38	2.93	6.50
EC160A	160mm	10,300	100,000	1.00	2.25	2.20	48mm	1.50	4.25	2.25	4.75	1.50	0.38	2.93	6.50
506	6.050	10,330	170,000	1.00	2.75	1.94	48mm	1.50	3.75	1.75	3.75	36mm	0.50	3.00	6.00

PUSHER ATTACHMENTS

DRAWING NO. 12

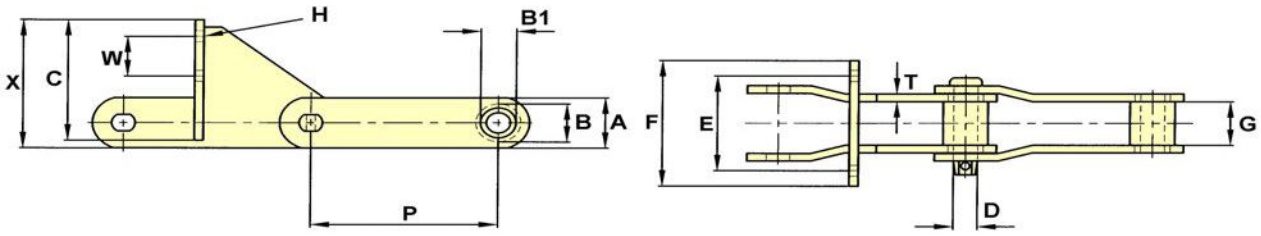

CHAIN NO.	PITCH P	ALLOW. LOAD	U.T.S.	PIN DIA. D	SIDEBAR DEPTH A	MAX. GEARING G	BUSH DIA. B	BUSH SHOULDER B1	C	E	F	H	T	W	X
EC160A	160mm	10,300	100,000	1.00	2.50	2.20	48mm	1.50	3.50	108mm	140mm	12mm	0.38	50mm	6.33
EC160A	160mm	10,300	100,000	1.00	2.50	2.20	48mm	1.50	3.50	120mm	160mm	12mm	0.38	50mm	6.33
EC200	200mm	10,300	100,000	1.00	2.50	2.20	48mm	1.50	6.00	120mm	6.25	12mm	0.38	50mm	6.38

PUSHER ATTACHMENTS

DRAWING NO. 55 H = BOLT DIAMETER

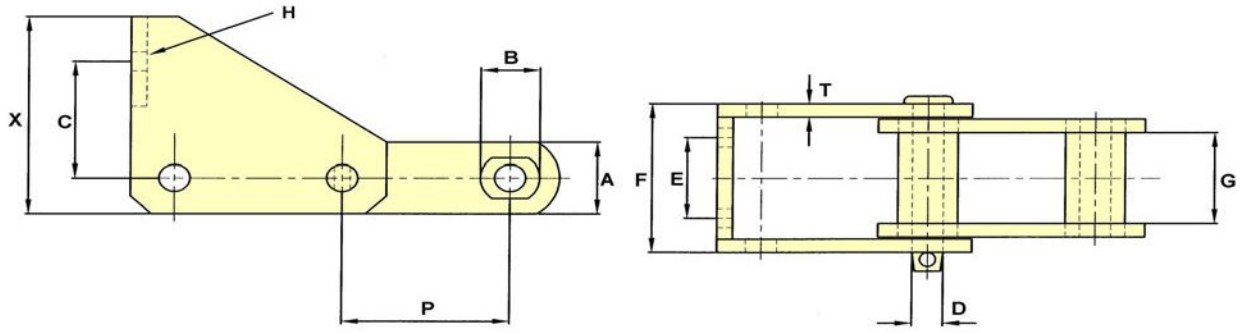

CHAIN NO.	PITCH P	ALLOW. LOAD	U.T.S.	PIN DIA. D	SIDEBAR DEPTH A	MAX. GEARING G	BUSH DIA. B	C	E	F	H	T	X
B5099	4.000	9,500	75,000	0.75	2.00	2.62	1.44	3.25	2.25	4.16	0.50	0.38	5.50

DRAWING NO. 57 H = BOLT DIAMETER

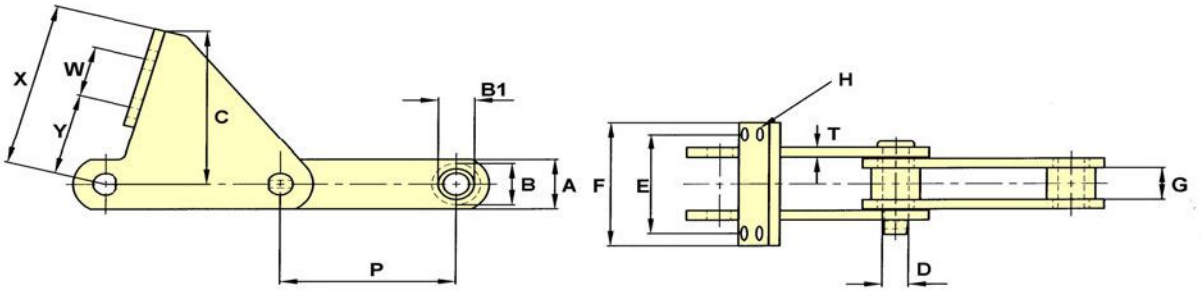

CHAIN NO.	PITCH P	ALLOW. LOAD	U.T.S.	PIN DIA. D	SIDEBAR DEPTH A	MAX. GEARING G	BUSH DIA. B	BUSH SHOULDER B1	C	E	F	H	T	W	X	Y
1796*	6.000	7,500	100,000	0.87	2.25	1.50	1.75	1.25	3.88	120mm	160mm	12mm	0.38	50mm	5.06	2.11
D2184	6.000	7,100	80,000	0.87	2.00	1.38	1.25	-	6.28	4.00	5.00	0.50	0.38	2.00	6.50	3.25

* PUSHER FACES ARE VERTICAL

TOWER CHAINS

CONVEYOR CHAIN

DRAWING NO. 148 H = BOLT DIAMETER

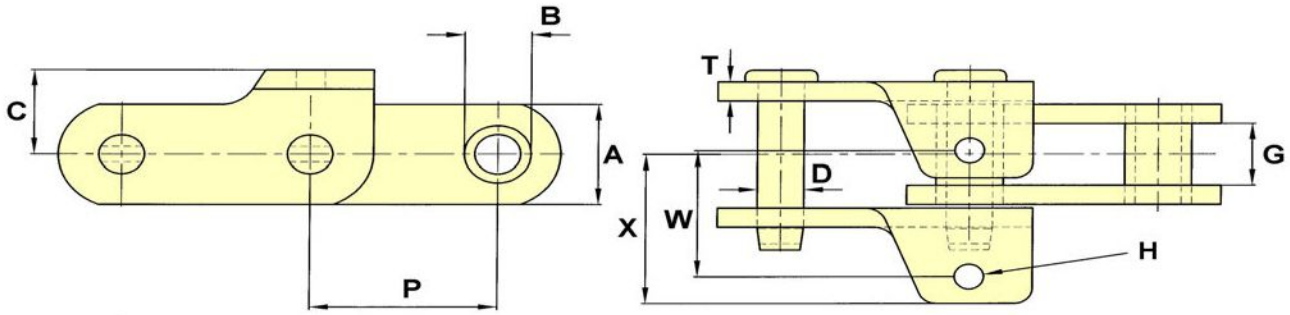

CHAIN NO.	PITCH P	ALLOW. LOAD	U.T.S.	PIN DIA. D	SIDEBAR DEPTH A	MAX. GEARING G	BUSH DIA. B	C	H	T	W	X
B5023	2.609	3,700	60,000	0.63	1.63	1.00	0.94	1.38	0.38	0.31	1.88	2.44

CUTTER CHAIN

DRAWING NO. 147 H = BOLT DIAMETER

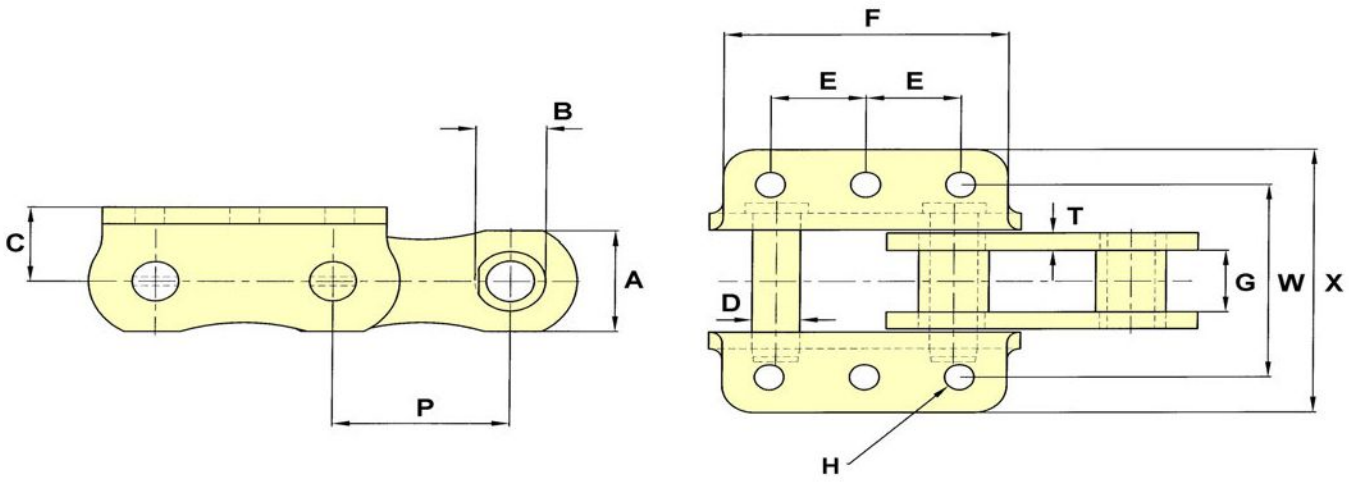

CHAIN NO.	PITCH P	ALLOW. LOAD	U.T.S.	PIN DIA. D	SIDEBAR DEPTH A	MAX. GEARING G	BUSH DIA. B	C	E	F	H	T	W	X
B2024	2.800	4,700	60,000	0.75	1.88	1.16	1.13	1.38	1.50	4.50	0.44	0.31	3.50	4.88

G20 ATTACHMENTS

DRAWING NO. 30 H = BOLT DIAMETER

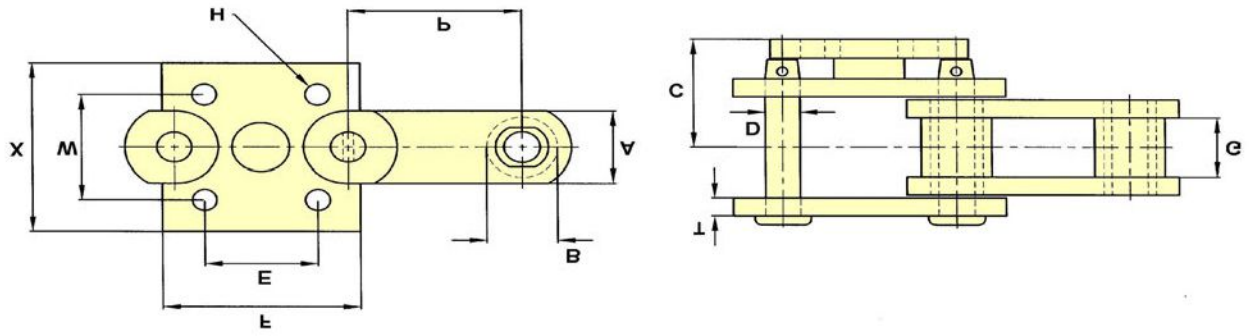

CHAIN NO.	PITCH P	ALLOW. LOAD	U.T.S.	PIN DIA. D	SIDEBAR DEPTH A	MAX. GEARING G	BUSH DIA. B	C	E	F	H	W	X
SS131	3.075	4,500	40,000	0.62	1.50	1.31	1.25	2.25	2.00	3.50	0.38	2.19	3.50

DRAWING NO. 32 H = BOLT DIAMETER

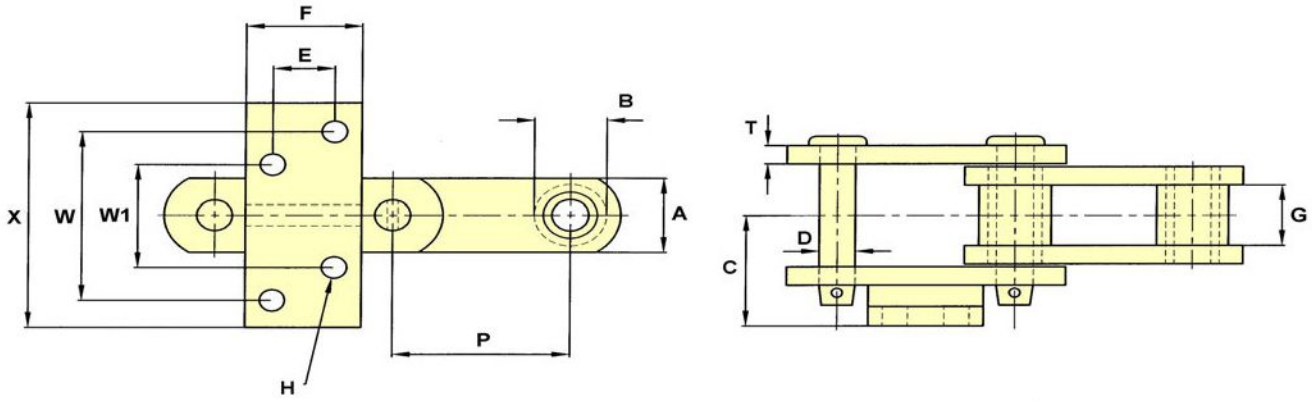

CHAIN NO.	PITCH P	ALLOW. LOAD	U.T.S.	PIN DIA. D	SIDEBAR DEPTH A	MAX. GEARING G	BUSH DIA. B	C	E	F	H	W	W1	X
SS103	3.075	4,100	25,000	0.62	1.50	1.90	1.22	2.06	0.63	2.00	0.38	3.00	1.75	4.00

OUTBOARD ROLLER

DRAWING NO. 144

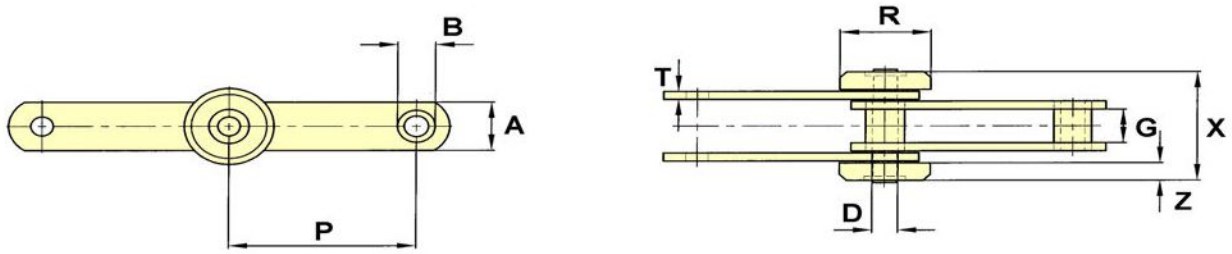

CHAIN NO.	PITCH P	ALLOW. LOAD	U.T.S.	PIN DIA. D	SIDEBAR DEPTH A	MAX. GEARING G	BUSH DIA. B	R	X	Z
B125	125MM	3,600	24,000	0.62	1.50	1.03	1.00	60MM	3.19	0.54

EXTENDED PINS

DRAWING NO. 48

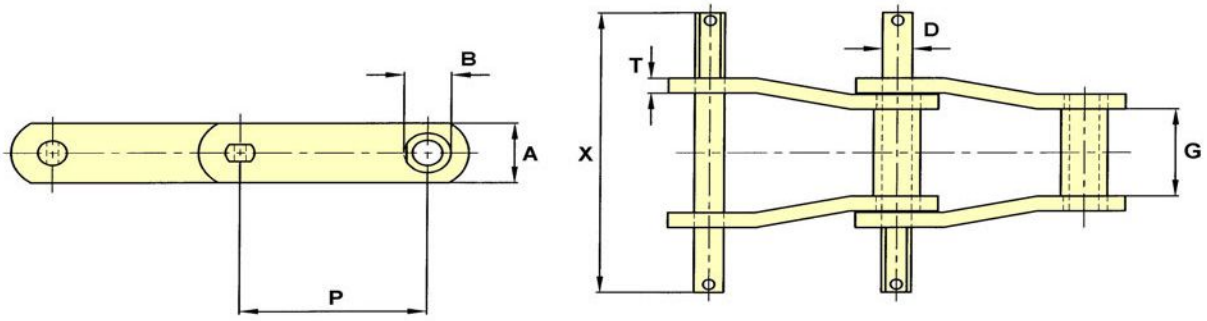

CHAIN NO.	PITCH P	ALLOW. LOAD	U.T.S.	PIN DIA. D	SIDEBAR DEPTH A	MAX. GEARING G	BUSH DIA. B	T	X
B5063	4.000	6,300	50,000	0.62	1.50	2.13	1.00	0.38	7.06
B5109	4.000	6,400	67,000	0.62	1.50	2.19	1.00	0.38	7.03

ROTARY DRIVE CHAINS

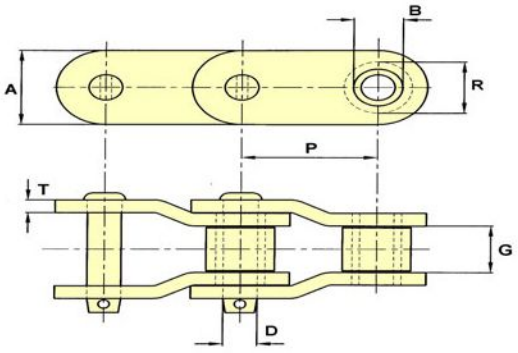

DIRECTION OF TRAVEL

STYLE 2 - CRANKED SIDEBAR

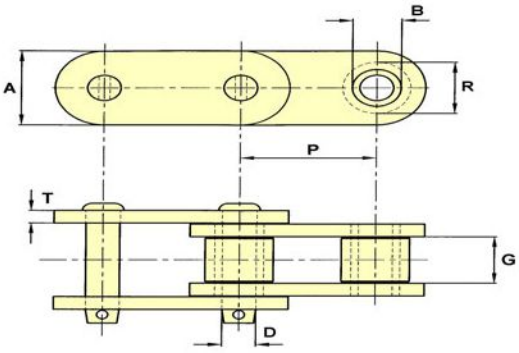

DIRECTION OF TRAVEL

STYLE 1 - STRAIGHT SIDEBAR

CHAIN NO.	PITCH P	ALLOW. LOAD	U.T.S.	PIN DIA. D	ROLLER DIA. R	SIDEBAR DEPTH A	SIDEBAR THICKNESS T	MAX. GEARING G	BUSH DIA. B	CHAIN WEIGHT lb/ft	CHAIN STYLE
EXS2065	2.000	3,890	65,000	0.59	1.13	1.63	0.31	1.25	0.87	7.6	2
2500X	2.500	5,190	68,000	0.62	1.25	1.63	0.31	1.50	0.91	8.8	2
64S	2.500	7,500	115,000	0.88	1.56	2.38	0.38	1.53	1.21	12.8	1
EXS882	2.609	2,500	28,000	0.44	0.87	1.13	0.25	1.13	0.64	3.6	2
EXS402	3.075	4,650	48,000	0.62	1.25	1.50	0.31	1.50	0.88	7.4	2
API3P	3.075	5,100	75,000	0.65	1.25	1.56	0.38	1.50	0.91	8.6	2
1190EXX	3.075	5,100	100,000	0.65	1.25	1.75	0.38	1.50	0.91	8.3	2
3012	3.067	6,000	110,000	0.75	1.63	2.25	0.38	1.56	1.13	13.9	2
3067X	3.067	6,000	110,000	0.75	1.63	2.00	0.38	1.58	1.13	12.0	2
2512*	3.067	6,410	115,000	0.75	-	2.13	0.38	1.50	1.25	11.0	2
B7811	3.075	5,100	100,000	0.65	1.25	1.75	0.38	1.50	0.91	8.3	2
E3114	3.090	7,650	140,000	0.88	1.75	2.25	0.50	1.50	1.25	17.5	2
E238R	3.500	7,650	150,000	0.88	1.75	2.25	0.50	1.50	1.25	16.0	2
3514	3.500	7,650	150,000	0.88	1.75	2.25	0.50	1.50	1.25	16.7	2
1664A	4.000	14,700	250,000	1.19	2.25	3.25	0.56	2.19	1.63	28.6	2
API4P	4.063	9,000	150,000	0.88	1.75	2.25	0.50	2.00	1.25	15.7	2
4014	4.063	9,000	150,000	0.88	1.75	2.25	0.50	2.00	1.25	15.7	2
RX1245	4.073	10,050	170,000	0.94	1.78	2.38	0.56	1.94	1.31	18.7	2
4015A	4.073	10,050	170,000	0.94	1.78	2.38	0.56	1.94	1.31	18.7	2
E4073	4.073	11,500	170,000	1.00	1.78	2.38	0.56	1.94	1.31	18.7	2
4016	4.090	11,500	170,000	1.00	1.87	2.75	0.56	1.94	1.31	22.6	2
4016LR	4.090	11,500	170,000	1.00	2.00	2.75	0.56	1.94	1.31	23.3	2
4500A	4.500	12,200	208,000	1.09	2.25	3.00	0.56	2.06	1.63	24.5	2
EXS5026	5.000	16,130	260,000	1.25	2.50	3.25	0.56	2.56	1.88	31.1	2
5020	5.000	17,500	260,000	1.25	2.50	3.50	0.63	2.75	1.88	35.1	2
EXS5027	5.000	17,500	260,000	1.25	2.50	3.5	0.63	2.75	1.88	35.1	2
1605AAA	5.000	21,000	330,000	1.38	2.50	3.50	0.75	2.56	1.88	39.8	2
5022	5.000	21,000	330,000	1.38	2.50	3.50	0.75	2.56	1.88	39.8	2
E1605	5.000	22,200	330,000	1.38	2.50	3.50	0.75	2.75	1.88	40.3	2
EXS5042	5.000	23,700	420,000	1.50	3.00	4.00	0.75	3.00	2.25	51.6	1
5500A	5.500	23,625	400,000	1.50	3.00	4.00	0.75	3.00	2.25	49.8	2
5524	5.500	23,700	420,000	1.50	3.00	4.00	0.75	3.00	2.25	49.8	2
6024	6.000	23,700	420,000	1.50	3.00	4.00	0.75	3.00	2.25	46.4	2
EXS6042	6.000	23,700	420,000	1.50	3.00	4.00	0.75	3.00	2.25	46.4	2

* = CHAIN NO. 2512 IS A NON-ROLLER CHAIN, AND THEREFORE, THE DIRECTION OF TRAVEL IS OPPOSITE TO ROLLER CHAINS

PRESSURE FEEDER DRIVE CHAINS

THESE CHAINS HAVE SPECIALLY TREATED COMPONENTS TO SUIT THIS APPLICATION

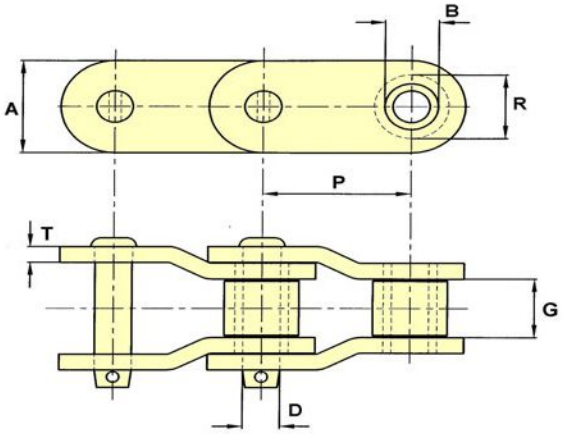

DIRECTION OF TRAVEL

STYLE 2 - CRANKED SIDEBAR

CHAIN NO.	PITCH P	ALLOW. LOAD	U.T.S.	PIN DIA. D	ROLLER DIA. R	SIDEBAR DEPTH A	SIDEBAR THICKNESS T	MAX. GEARING G	BUSH DIA. B	CHAIN WEIGHT lb/ft	CHAIN STYLE
API4P	4.063	9,000	150,000	0.88	1.75	2.25	0.50	2.00	1.25	15.7	2
4500A	4.500	12,200	208,000	1.09	2.25	3.00	0.56	2.06	1.63	24.5	2
1605AAA	5.000	21,000	330,000	1.38	2.50	3.50	0.75	2.56	1.88	39.8	2
E1605	5.000	22,200	330,000	1.38	2.50	3.50	0.75	2.75	1.88	40.3	2
EXS6042	6.000	23,700	420,000	1.50	3.00	4.00	0.75	3.00	2.25	46.4	2
6042X	6.000	23,700	420,000	1.50	3.00	4.00	0.81	3.00	2.25	49.1	2
6060	6.000	40,000	600,000	1.88	3.50	4.50	0.88	4.00	2.63	66.0	2